Detector Developments at Lawrence Berkeley National Lab.

Dionisio Doering
ddoering@lbl.gov

Introduction

- Development of a FastCCD (FCCD) camera
  - Concept
  - Prototype
  - Improved mechanical design
  - Larger area

- Other developments see P. Denes talk Thursday

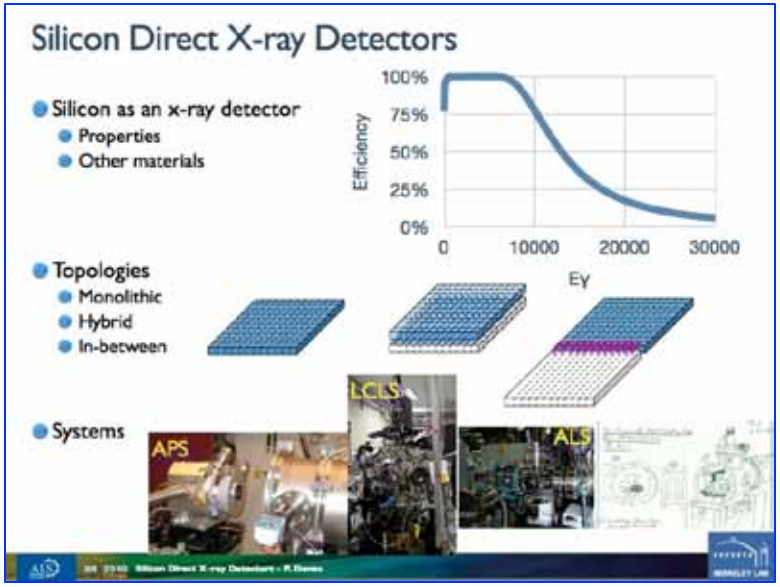

Typical 2D x-ray detector

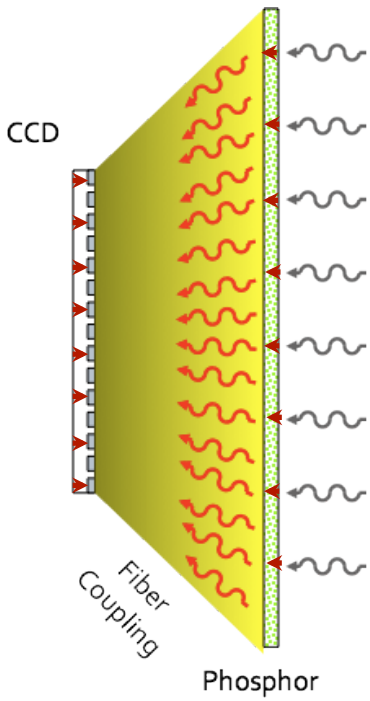

1. X-ray photoconverts in phosphor
2. Photoelectron ionizes →scintillation photons
3. Some distortion in fiber taper
4. Photons photoconvert in CCD
5. Collect the photoelectrons
6. Signal is digitized
7. Picture shows in the user's monitor

Our original idea

Improve this detector by making it faster
-faster readout (factor 100)
-faster phosphor

Concept - late 2003

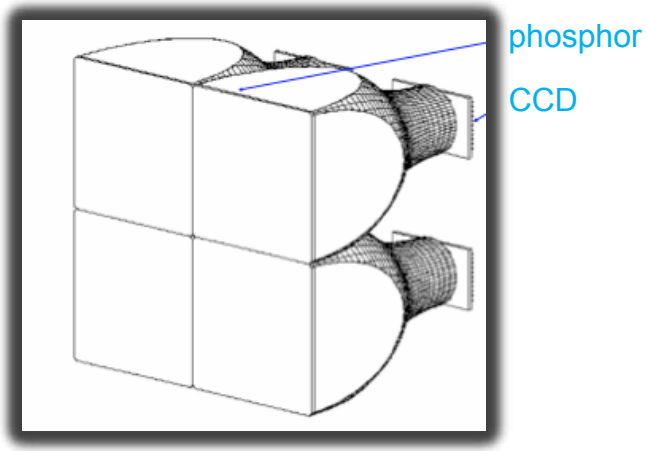

Original specs for X-ray detector:

- ≥ 100 frames / s
- 15 bit dynamic range
- 8 bit resolution
- sparse scan

No suitable CCD at the time!

Find multi-port CCD
Concentrate on readout
R&D on faster phosphor

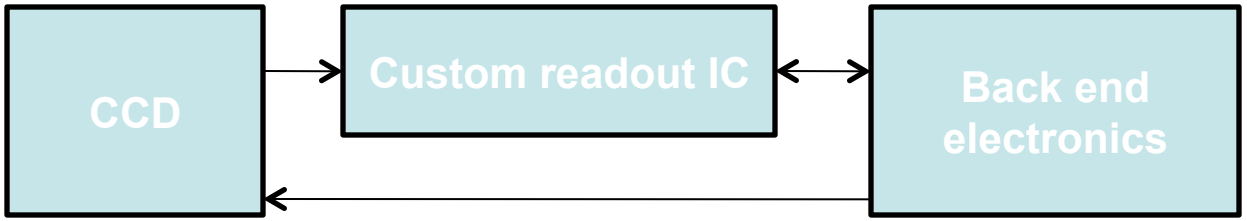

CCDs @ Micro Systems Lab (MSL)

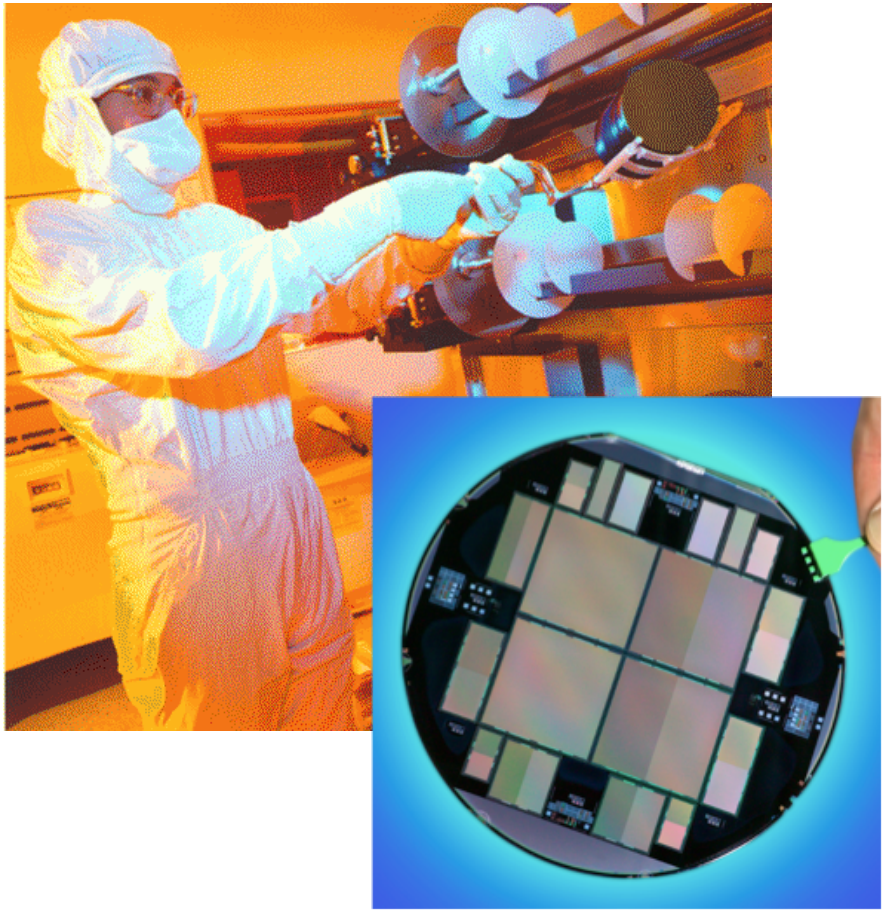

Super **N**ova **A**cceleration **P**robe
SNAP

LBNL 2k x 4k CCD:
Blue: H- at 656 nm Green: SIII at 955 nm Red: 1.02 nm

Thick, Fully Depleted LBNL CCD

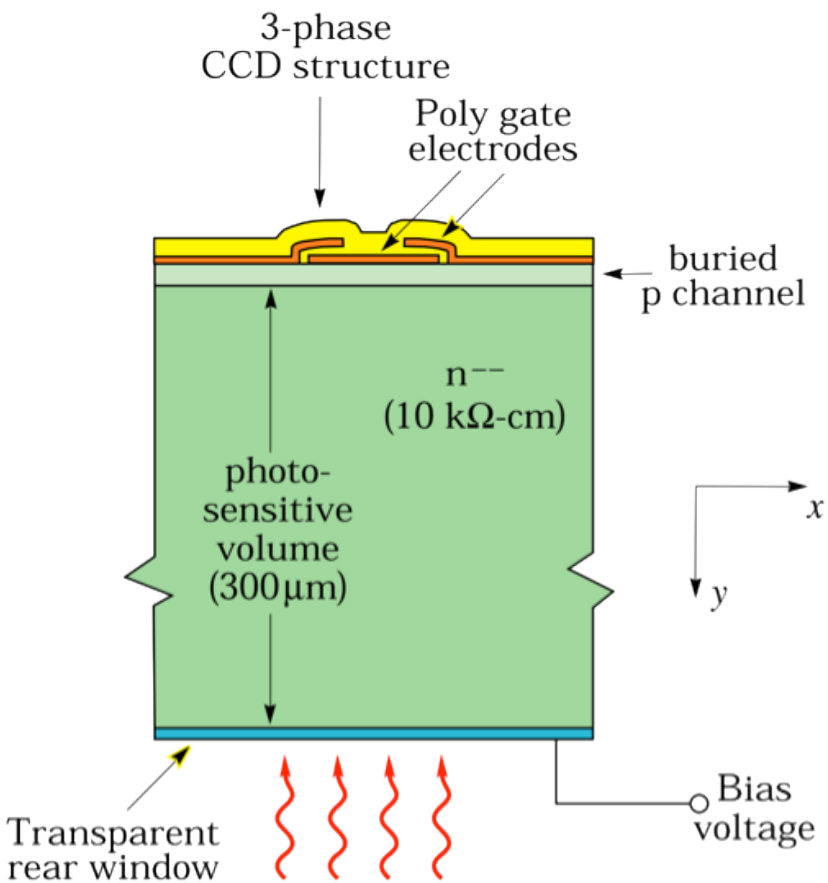

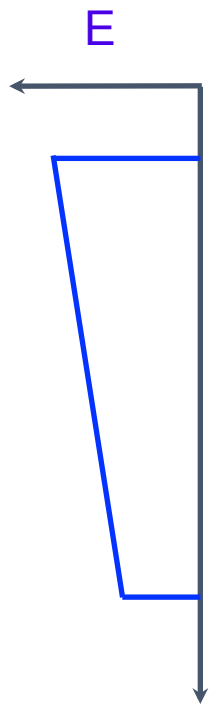

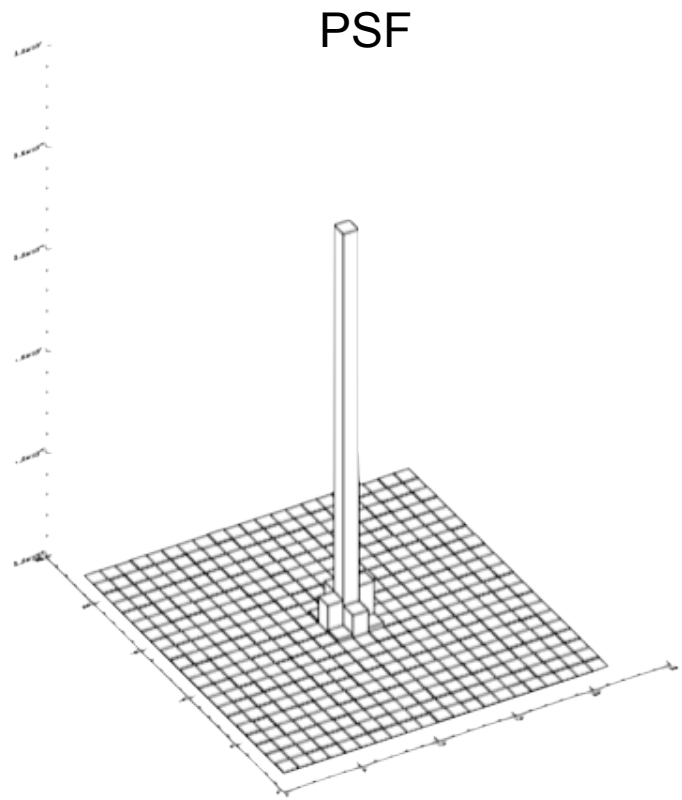

At V_{SUB} = 115 V,
σ_D = 3.7 ± 0.2 µm

S. Holland

Thick, Fully Depleted CCD good for visible light

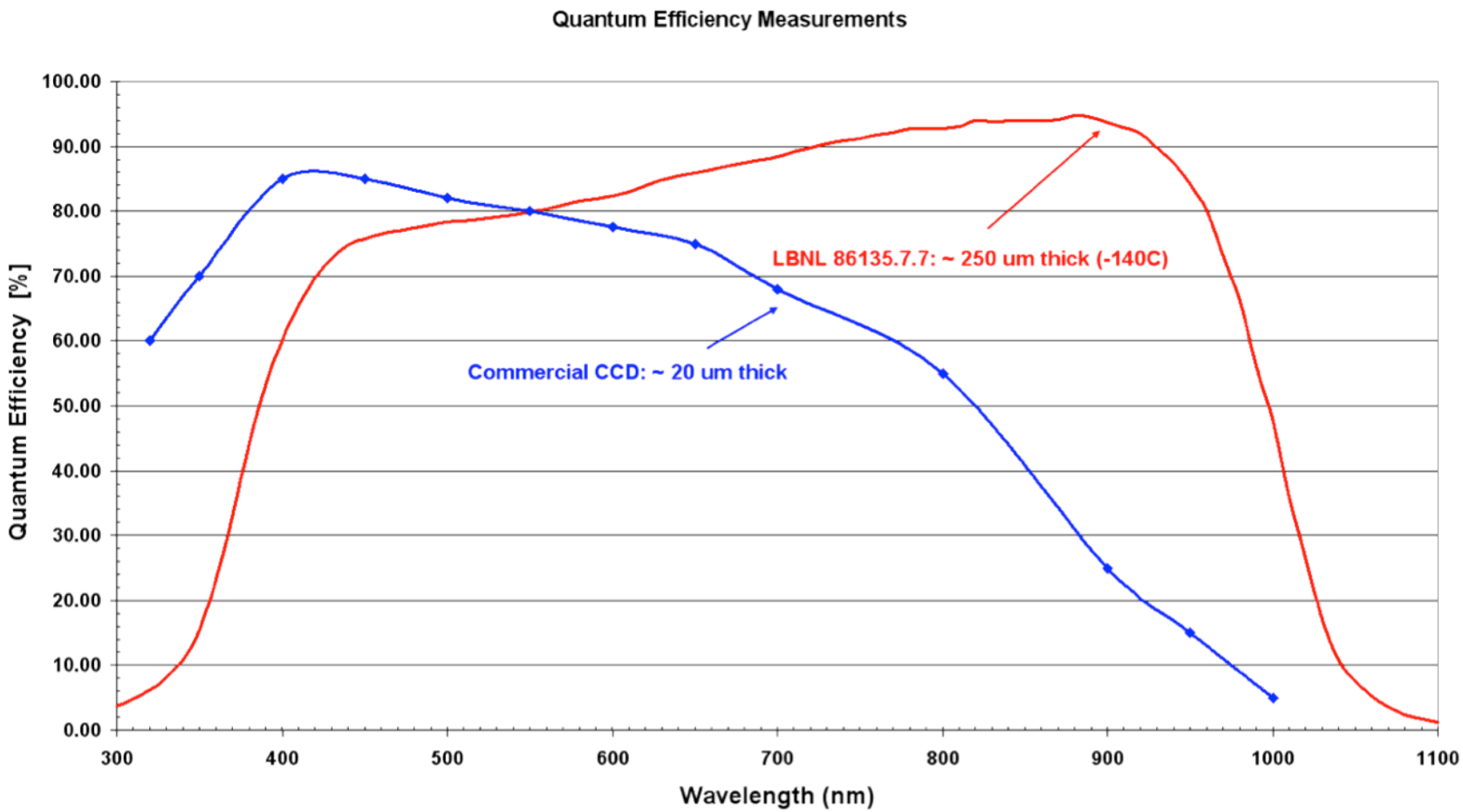

Thick, Fully Depleted CCD good for X-rays

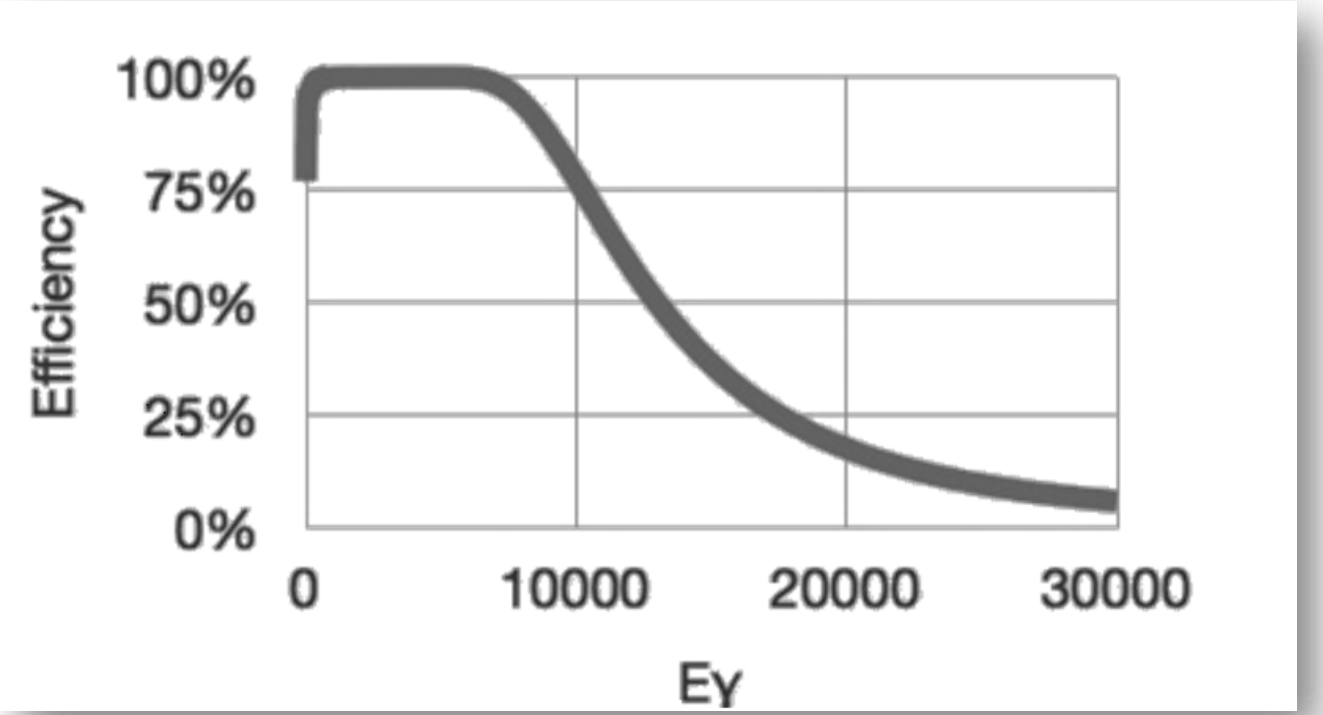

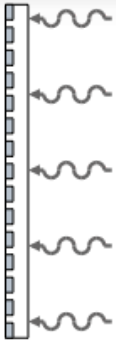

- **Direct x-ray detector**
  1. X-ray photoconverts in silicon
  2. CCD collects the photoelectrons (Much more signal)

CCD output configuration

- CCDs are intrinsically slow
  - Single output CCD
  - Column parallel CCD
  - Almost column parallel CCD
- LBNL FCCD
  - Multiple outputs (ex.48 per side)
  - Faster outputs (ex.1MHz)
  - 200 fps

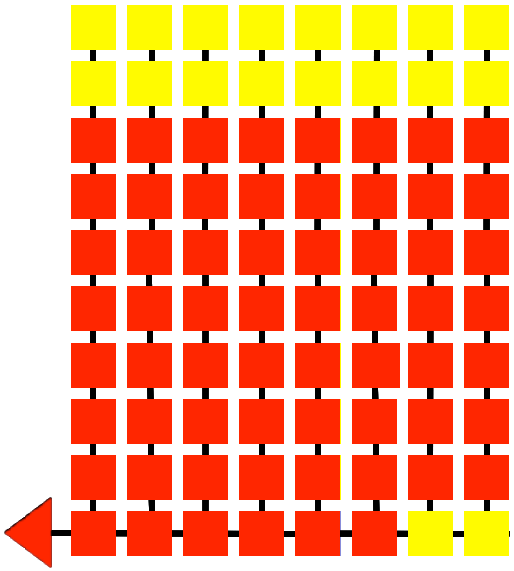

CCD output configuration

- CCDs are intrinsically slow
  - Single output CCD
  - Column parallel CCD
  - Almost column parallel CCD
- LBNL FCCD
  - Multiple outputs (ex.48 per side)
  - Faster outputs (ex.1MHz)
  - 200 fps

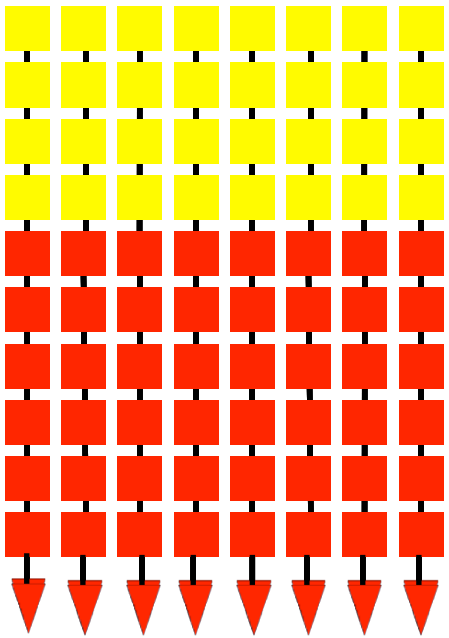

CCD output configuration

- CCDs are intrinsically slow
  - Single output CCD
  - Column parallel CCD
  - Almost column parallel CCD
- LBNL FCCD
  - Multiple outputs (ex.48 per side)
  - Faster outputs (ex.1MHz)
  - 200 fps

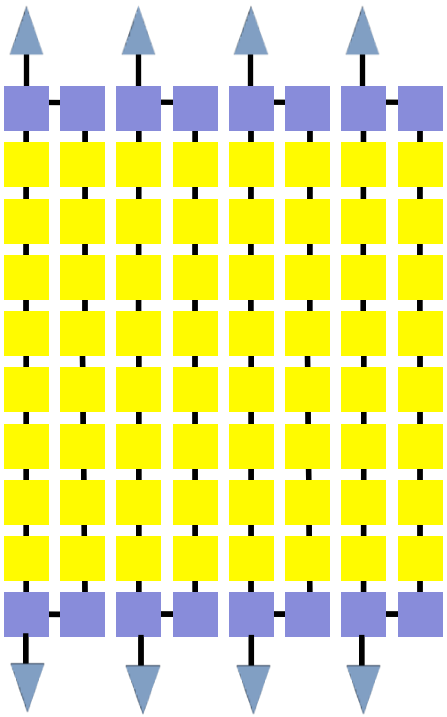

(almost) Column-Parallel Fast CCD (FCCD)

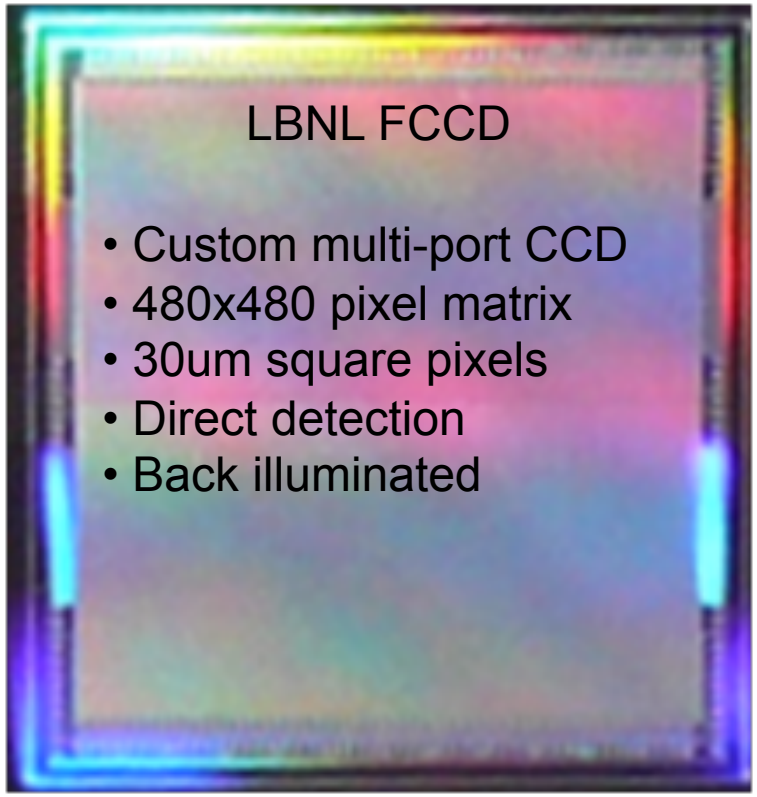

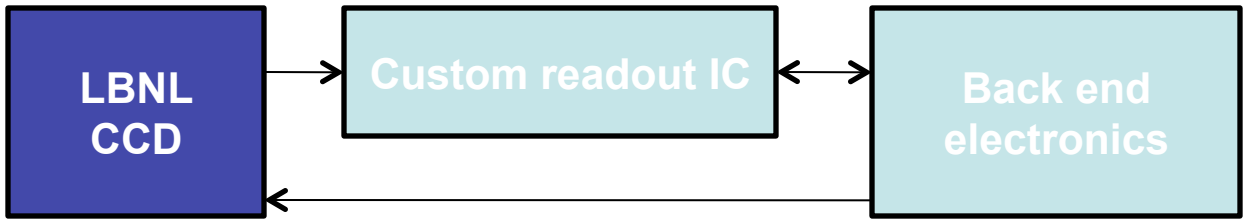

(almost) Column-Parallel Fast CCD (FCCD)

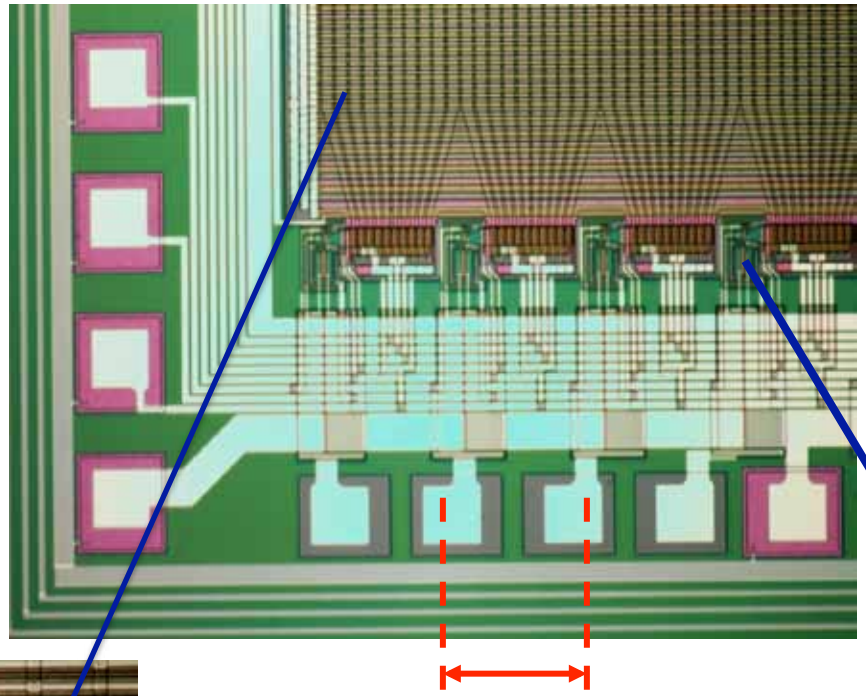

Constant area taper

Mini-shift reg.

Output stage

~300 µm pitch bond pads (wire-bondable)

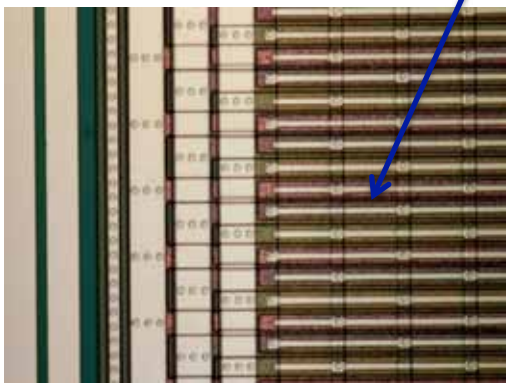

Metal strapping

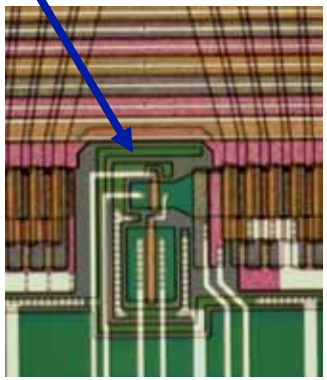

Readout IC – from *SNAP* to FCCD

- SNAP CCD readout (CRIC) requirements
  - 16 bit dynamic range at 100 kHz
  - 4 channels per chip
  - low power
  - space qualified

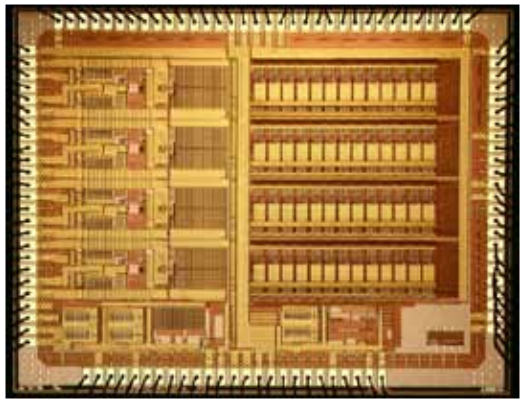

- Fast CCD readout (benefit from SNAP development)
  - 16 channels per chip
  - ADC pitch < 300 μm
  - 10 x speed

CCD Readout *FCRIC*

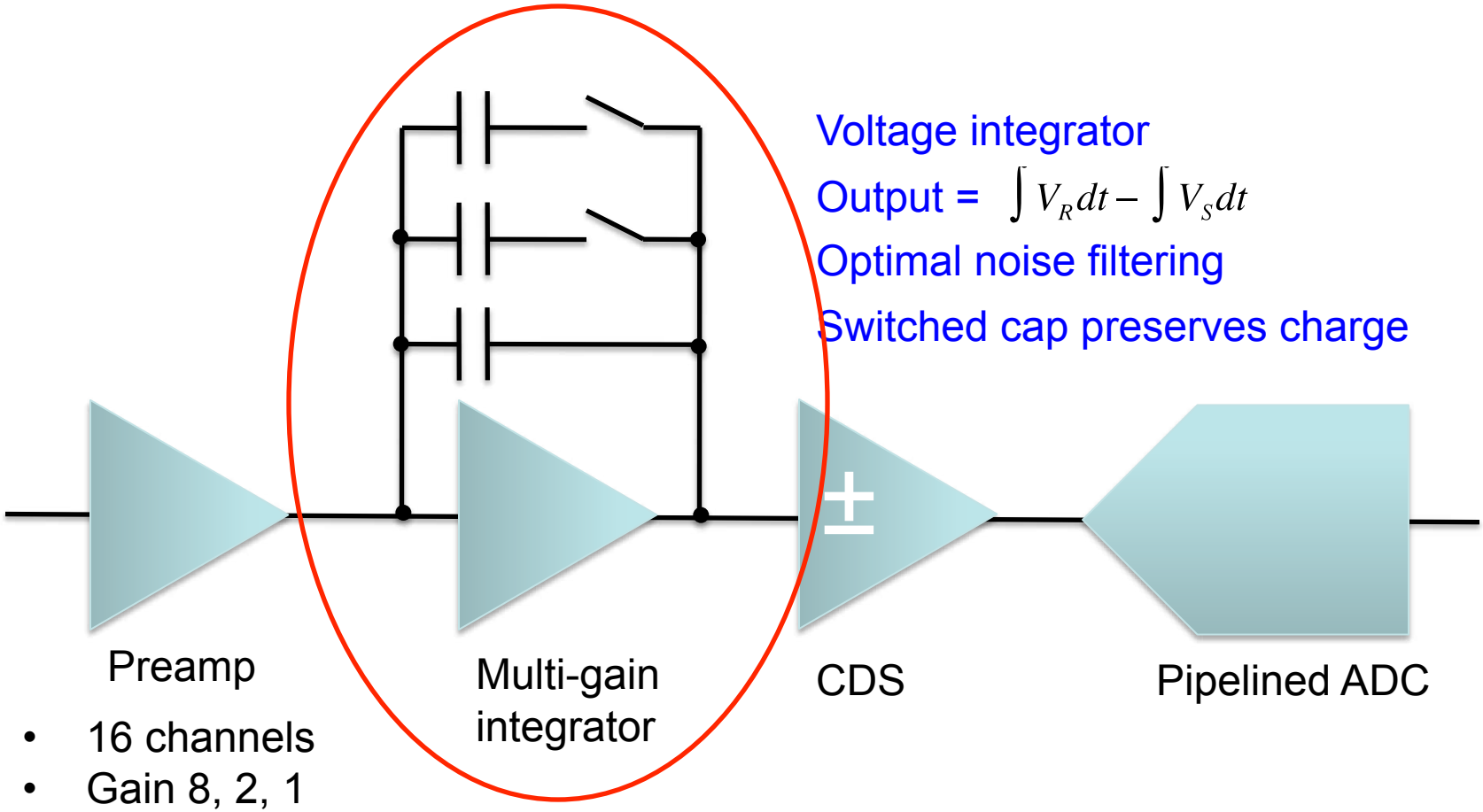

Voltage integrator

Output = $\int V_R dt - \int V_S dt$

Optimal noise filtering

Switched cap preserves charge

- 16 channels
- Gain 8, 2, 1
- 12 + 1 bit ADC
- Covers 15-bit dynamic range
- Quantization error always < photostatistics
- CDS – correlated double sampling

Floating Point Readout

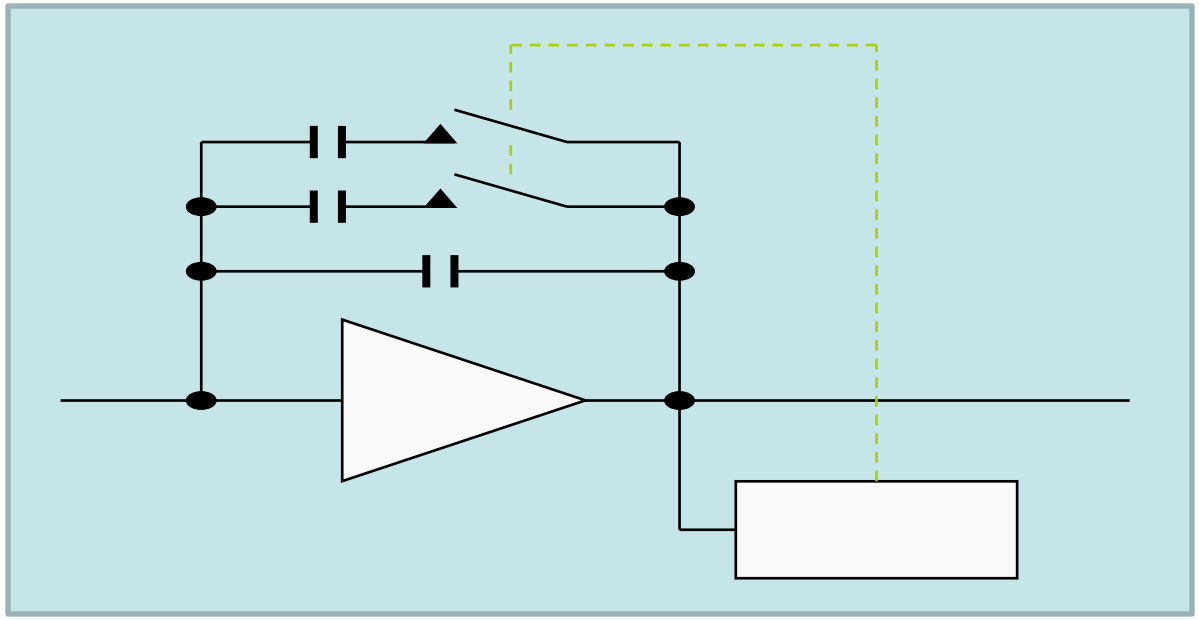

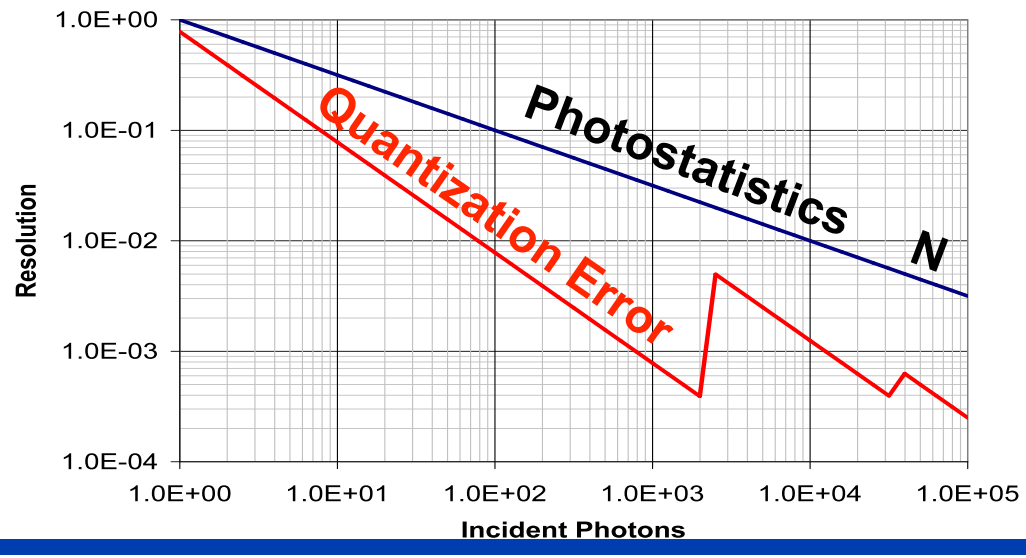

13-bit ADC block diagram

Basic 13-bit pipeline ADC architecture

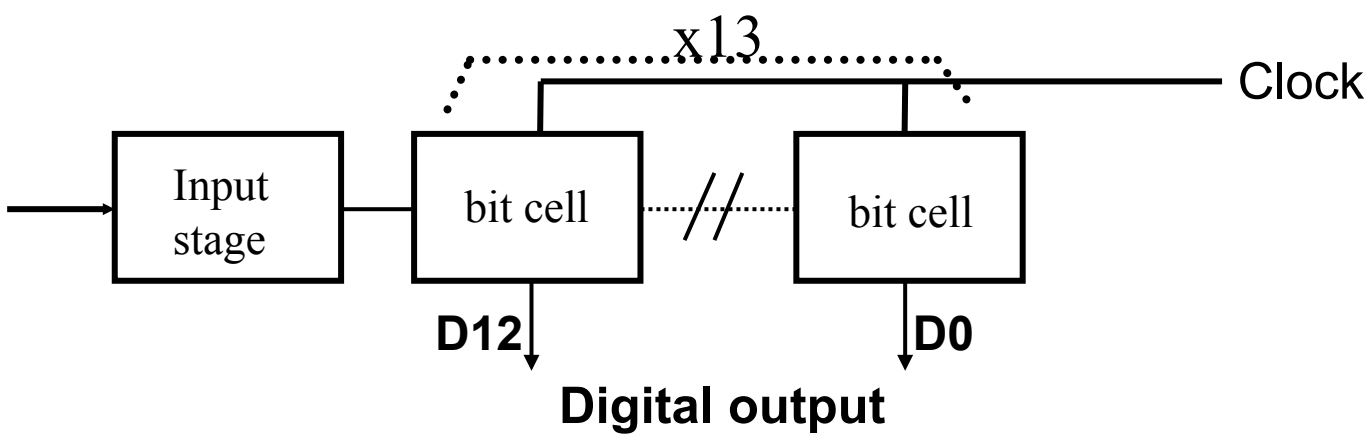

The 1.5-bit cell architecture

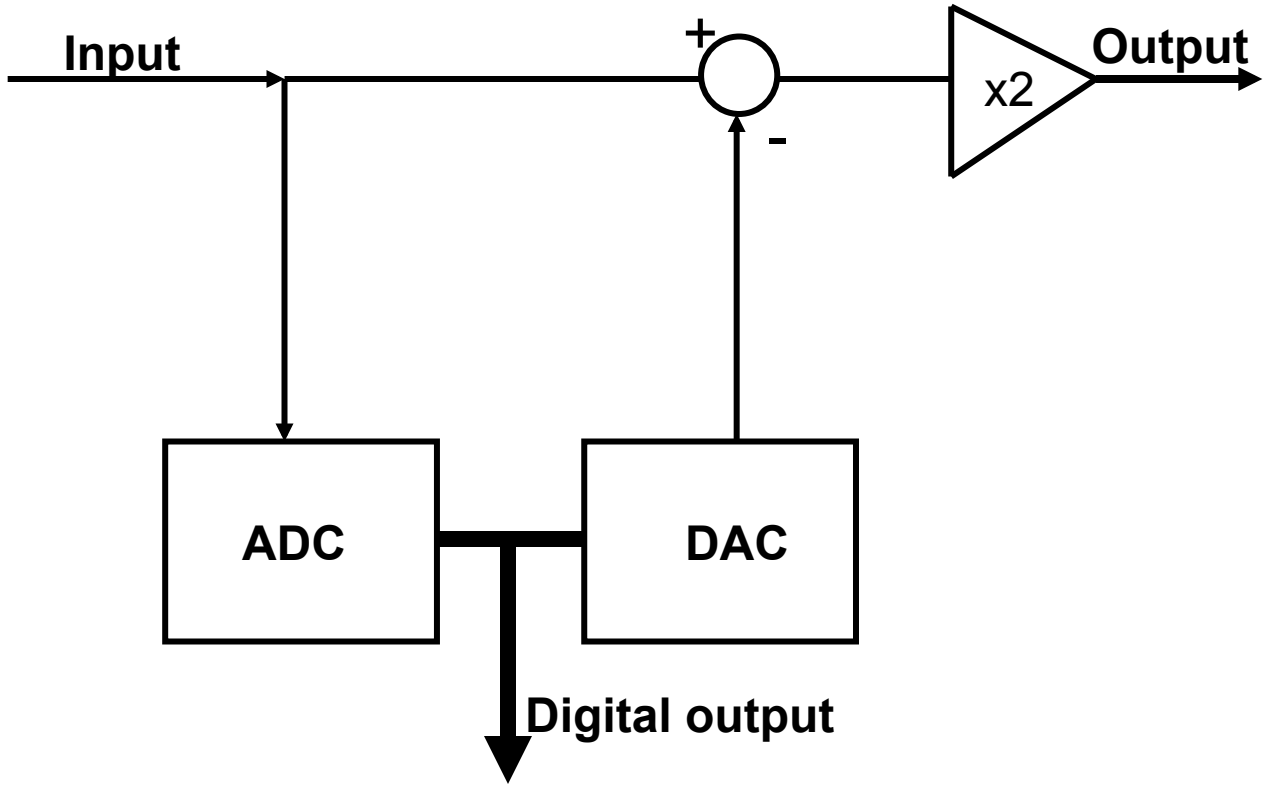

fCRIC

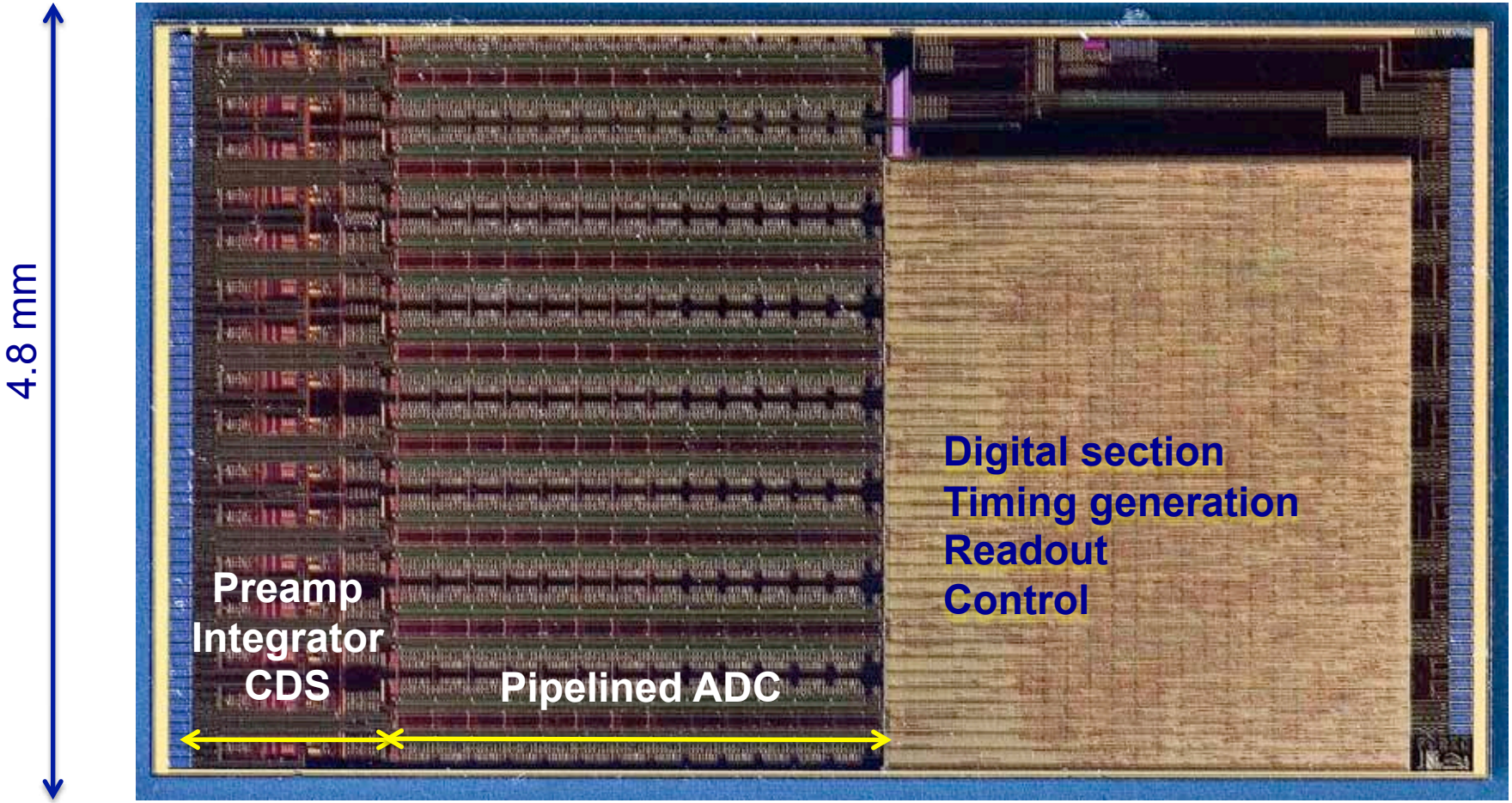

Custom CCD readout and ADC chip

FCCD readout sequence

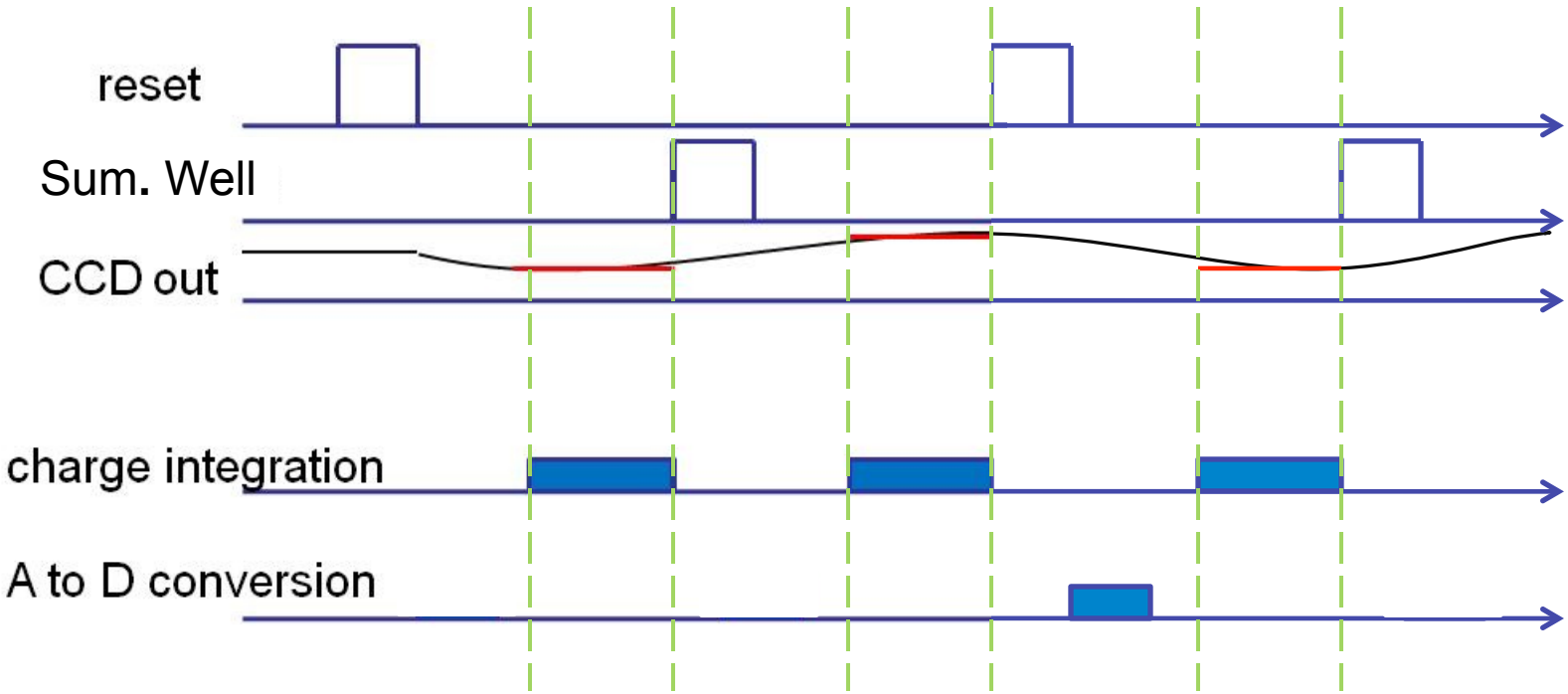

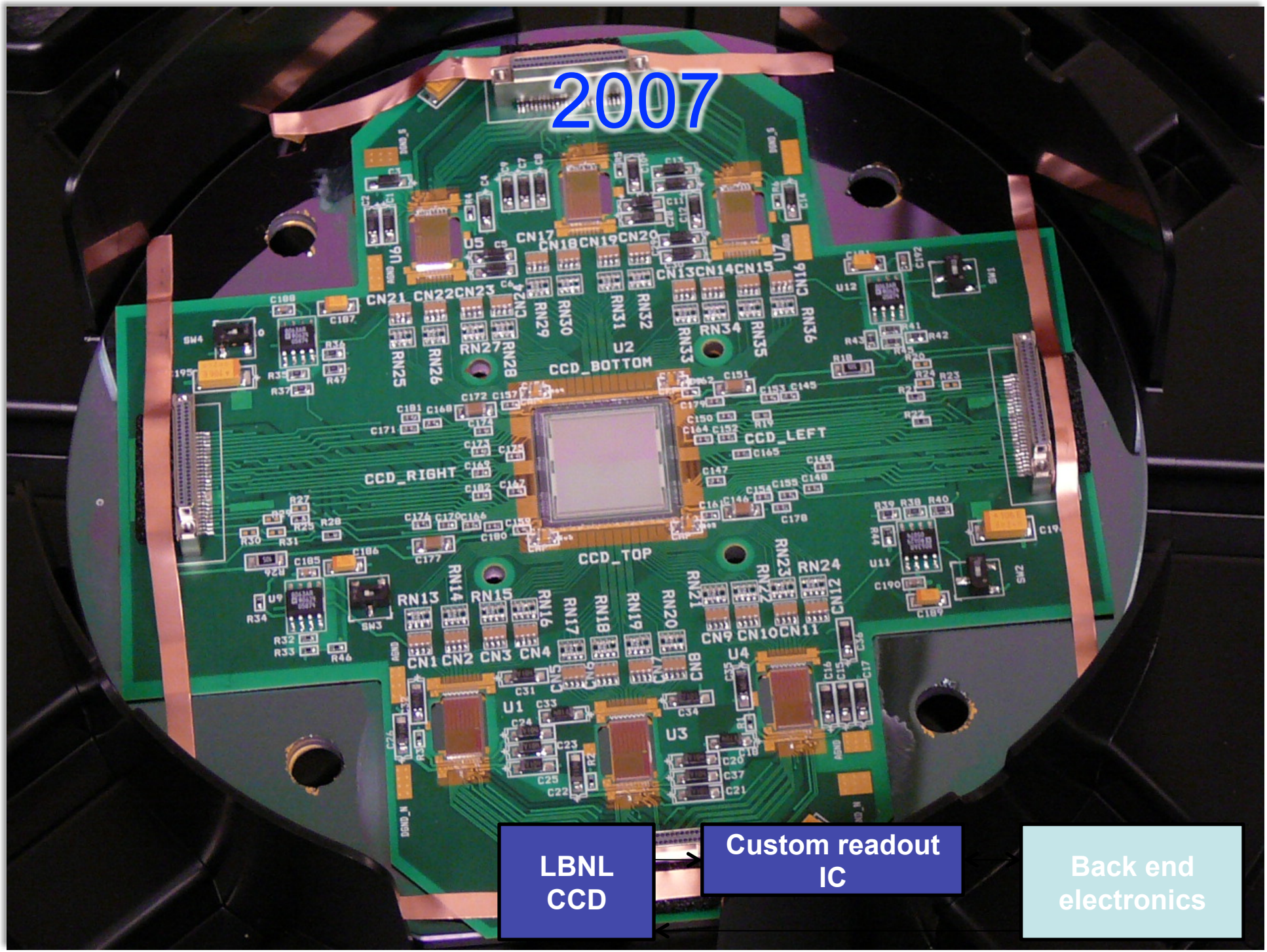
2007
CCD_BOTTOM
CCD_LEFT
CCD_RIGHT
CCD_TOP
LBNL CCD
Custom readout IC
Back end electronics

FCCD Readout – ANL/LBNL partnership

2008

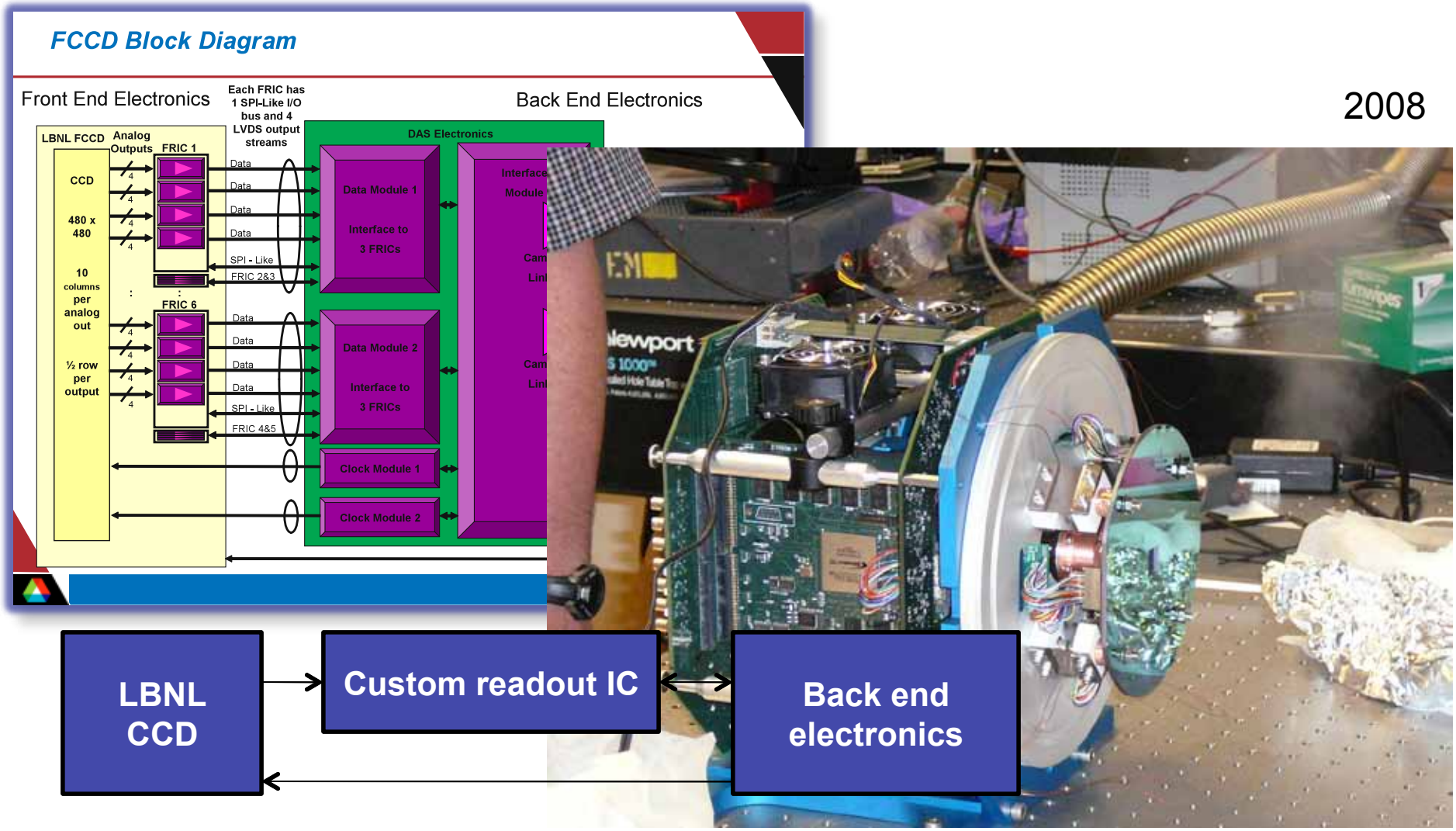

APS and FCCD

- January 11, 2009 – Peter and Dionisio arrived to install subassembly
- January 12 - First light with old substrate
- January 13 - First light with new substrate
- January 14 - First x-ray with x-ray tube
- January to July
  - Make Improvements
  - Characterize detector
- July 15, 2009 First beam at 8id
- :

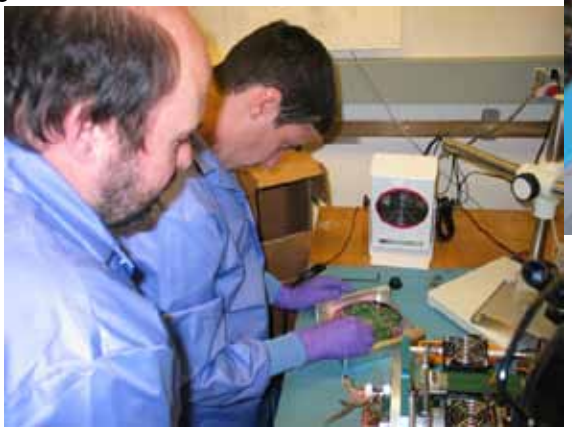

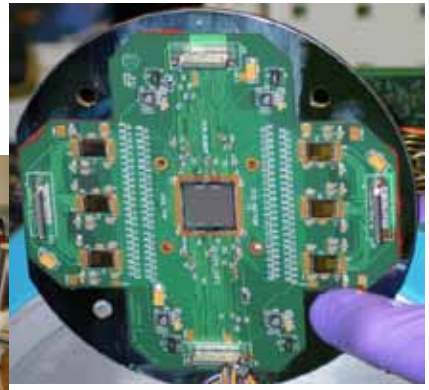

At the ALS
Ptycography / Scanning uDiffraction

ALS
BL 9.0.3

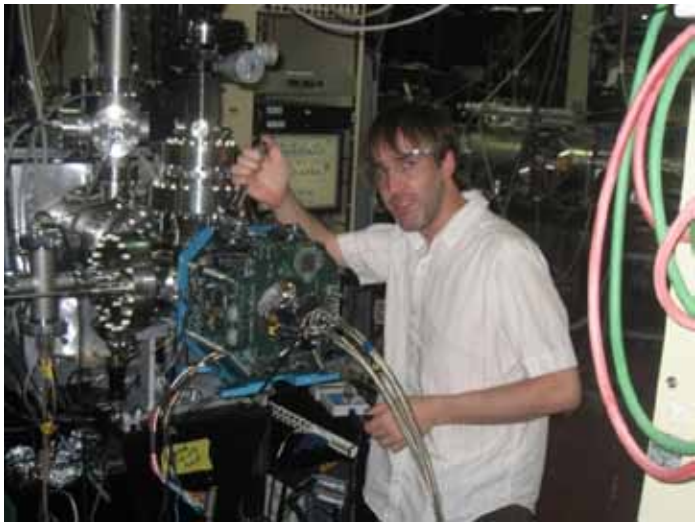

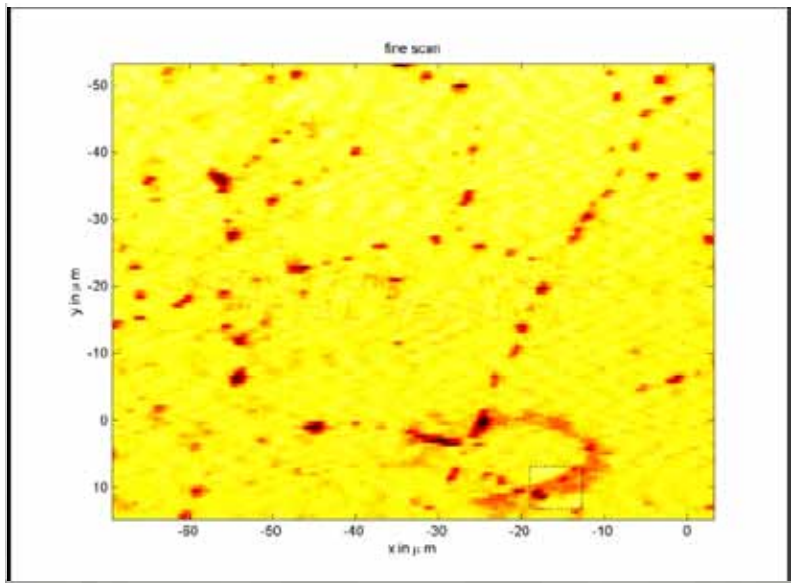

ALS
BL 12.3.2

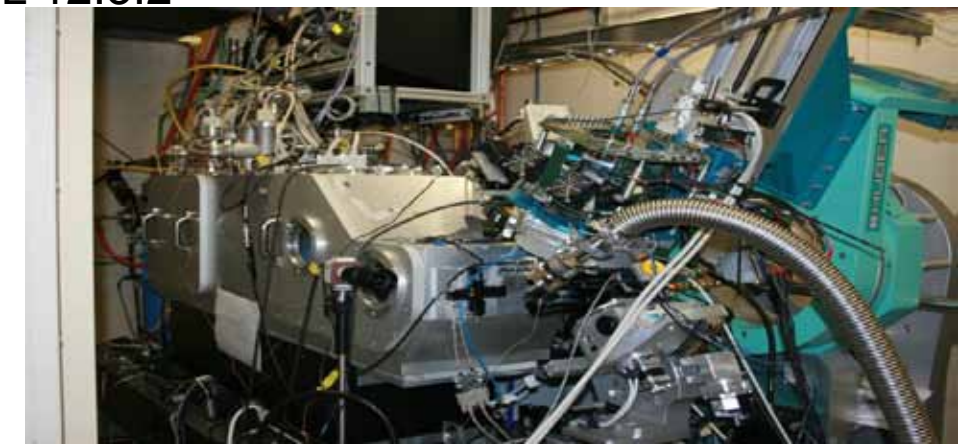

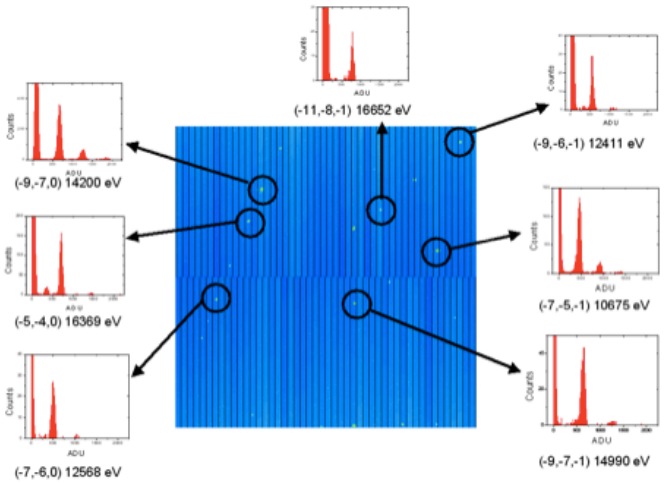

2.7 min. with FastCCD (at 20 Hz - disk write limited for this test) **6.2 hrs.** with *MAR133*

Need for compact, movable detector

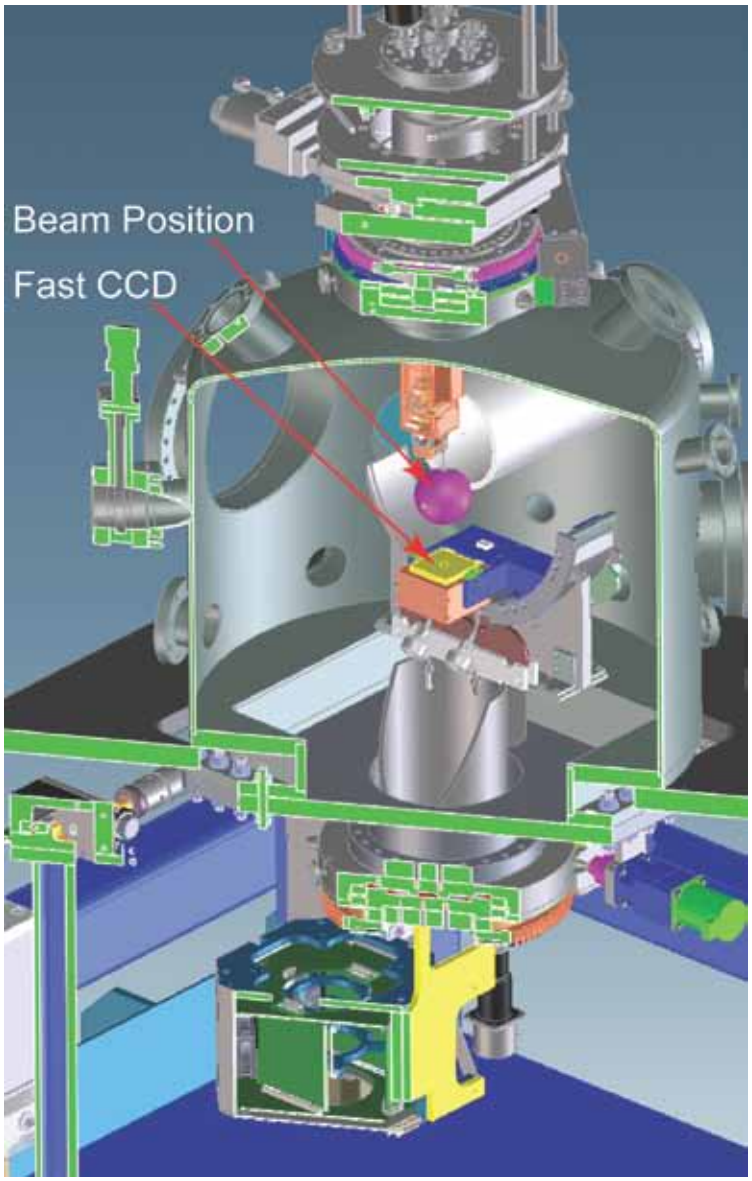

1. **Need compact FCCD (cFCCD)**
2. **Detector and sample are movable**
3. **Two Rotations:**
   - 360° in the horizontal plane.
   - 100° in the vertical plane.

Need for compact, movable detector

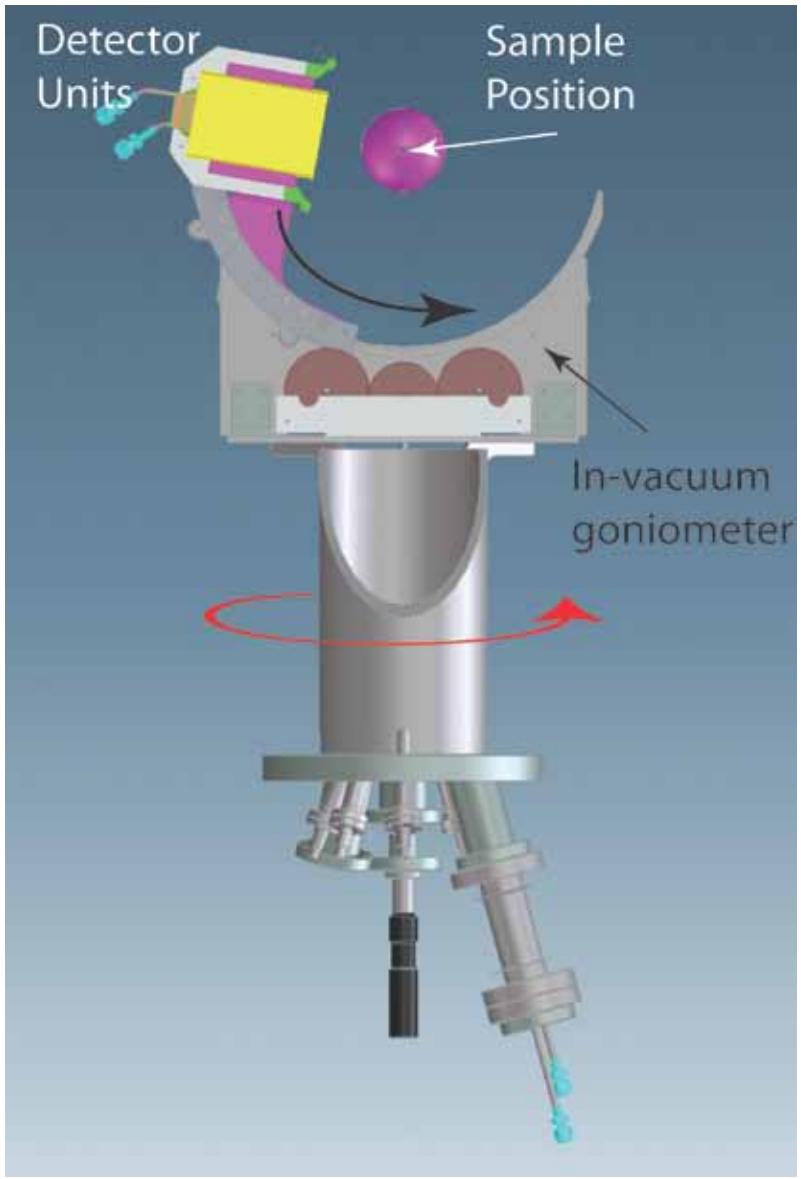

1. **Need compact FCCD (cFCCD)**
2. **Detector and sample are movable**
3. **Two Rotations:**
   - 360° in the horizontal plane.
   - 100° in the vertical plane.

From FCCD to Compact FCCD

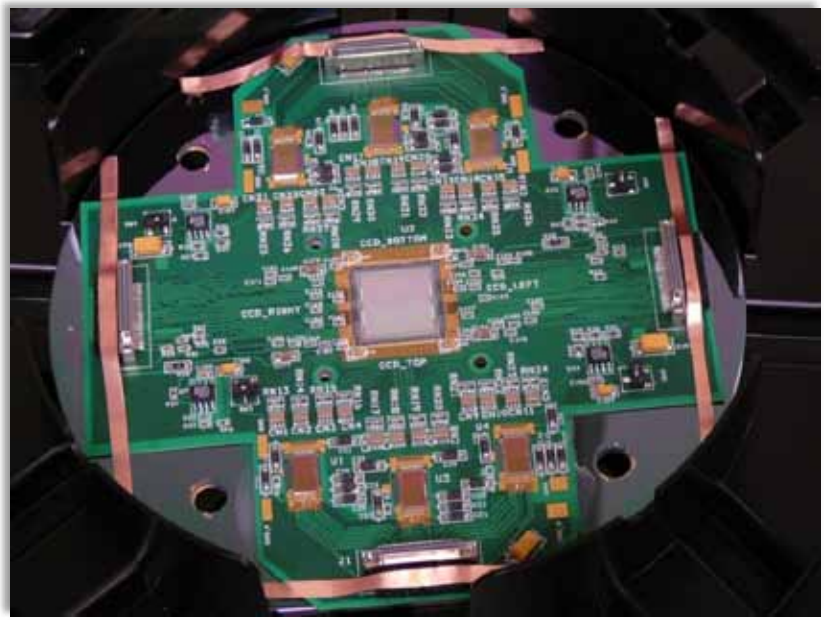

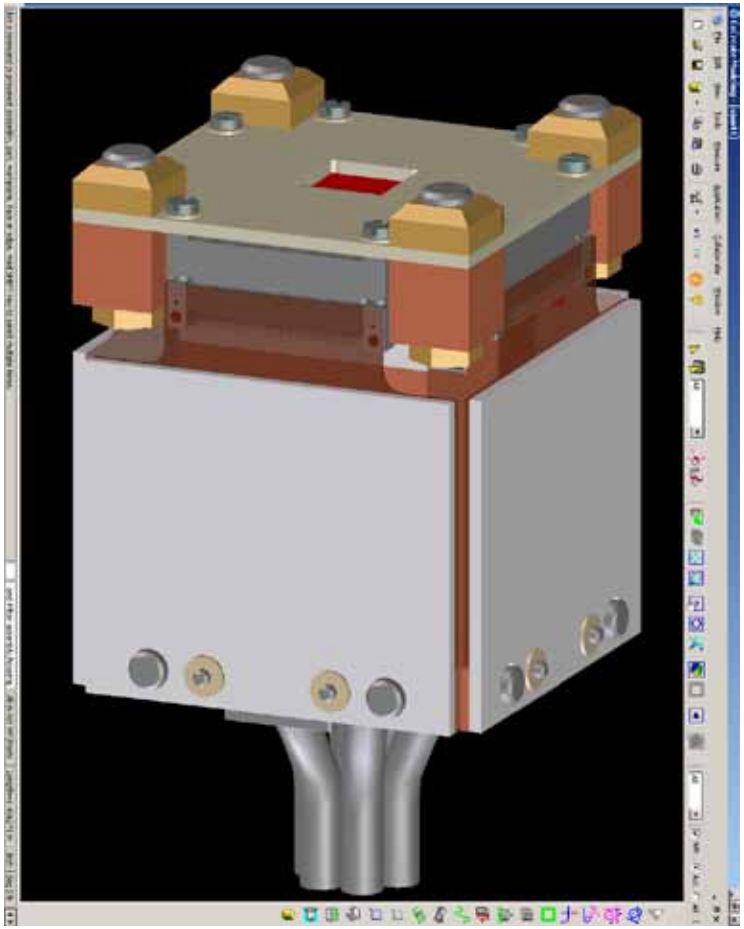

- FCCD 6” wafer holder
- cFCCD 2.5” cubic

Compact Fast CCD (cFCCD)

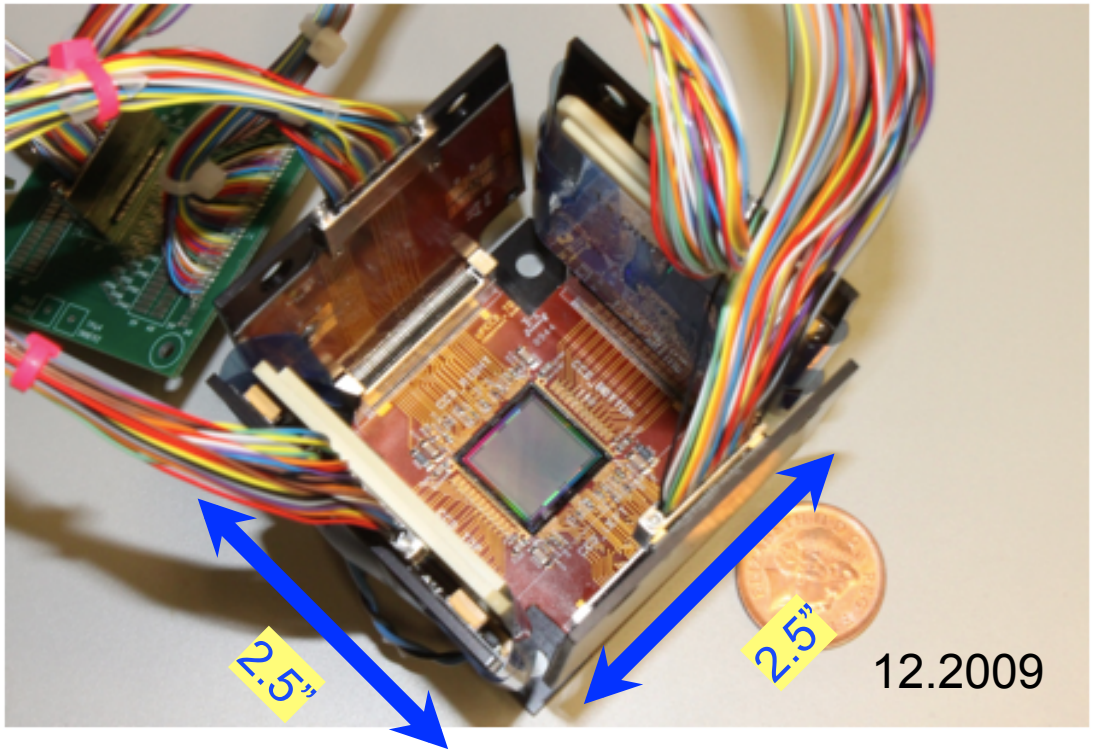

Prototype (front-illuminated)
Final mechanical / thermal verification

03.2010

Cooling for cFCCDs

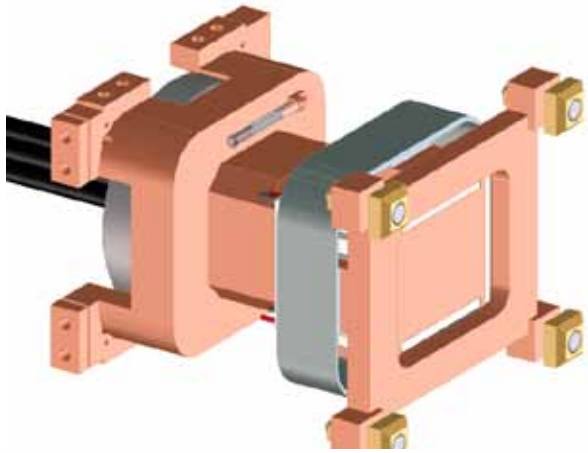

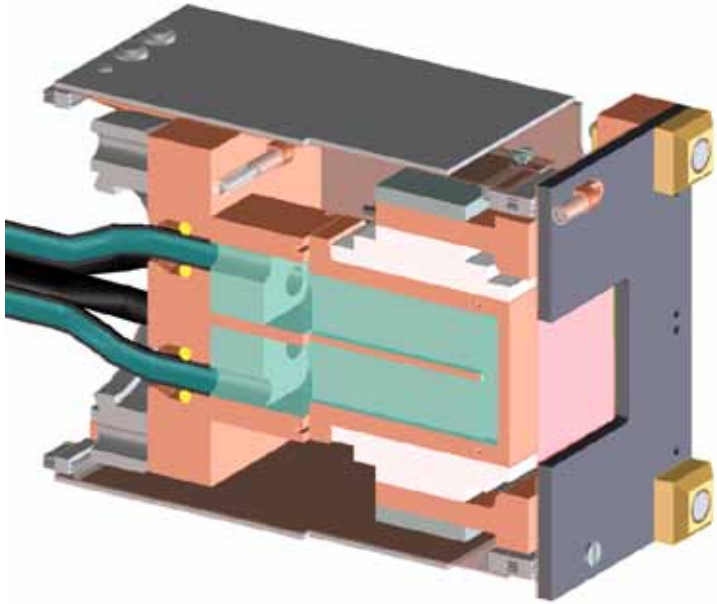

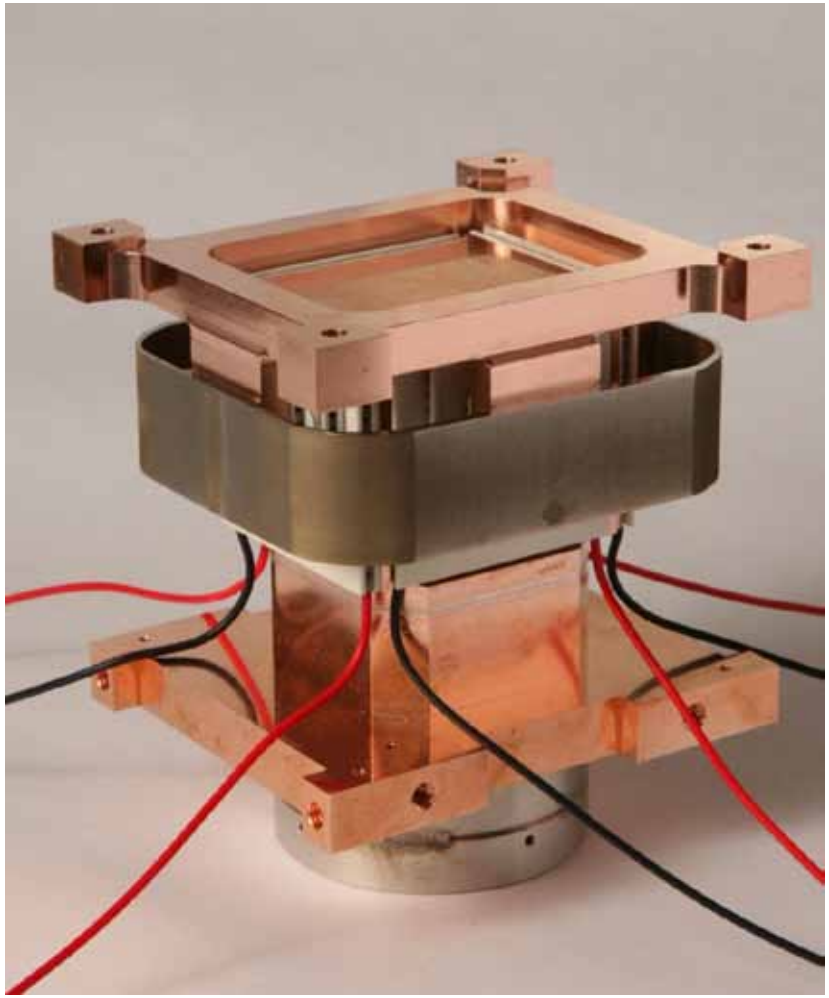

Soft x-ray scattering chamber for ALS / LCLS

cFCCD at beam line 8 at ALS

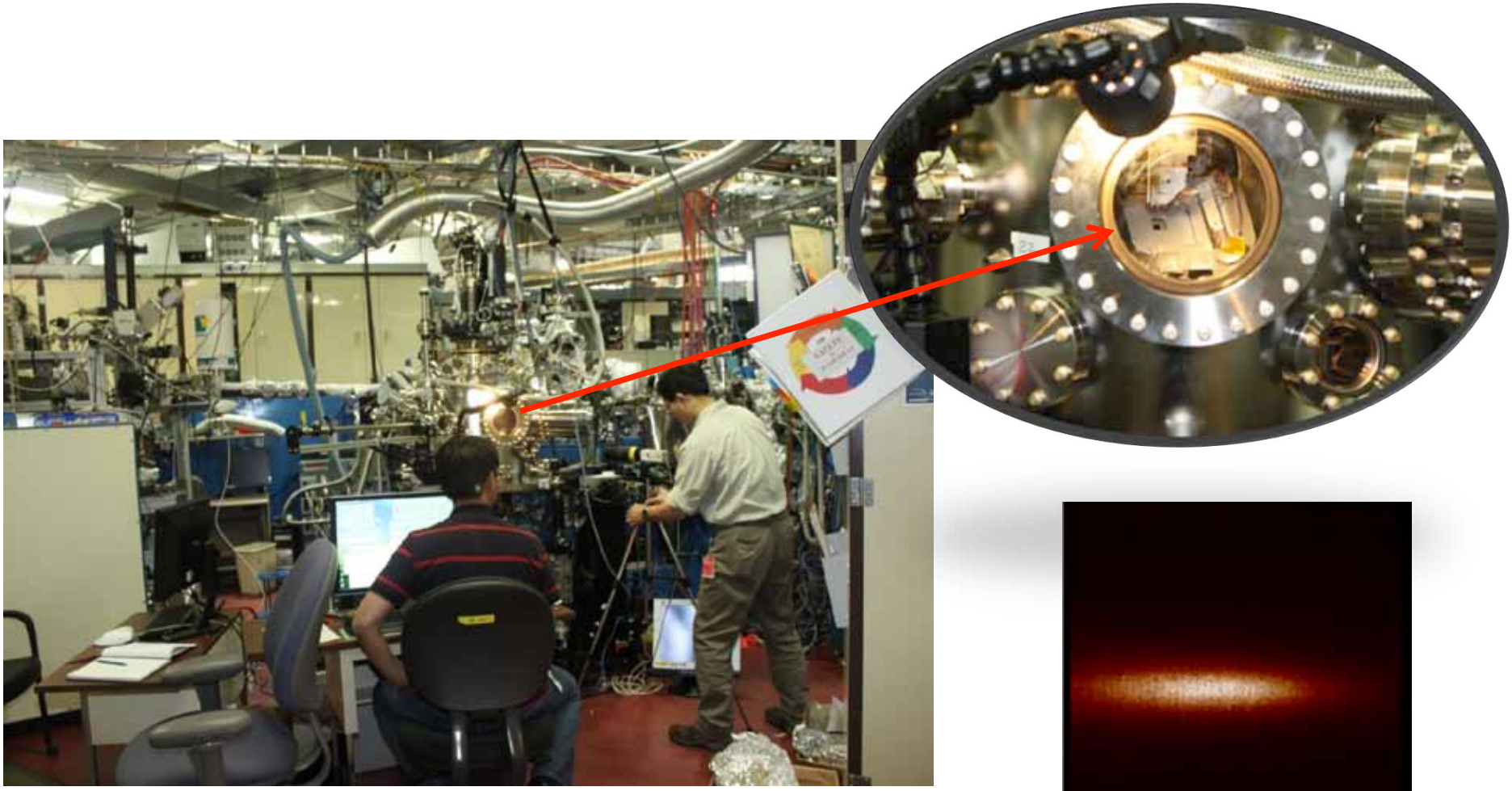

Data taken at 854 eV, Ni L-edge.

Experiment at hutch 2 at LCLS

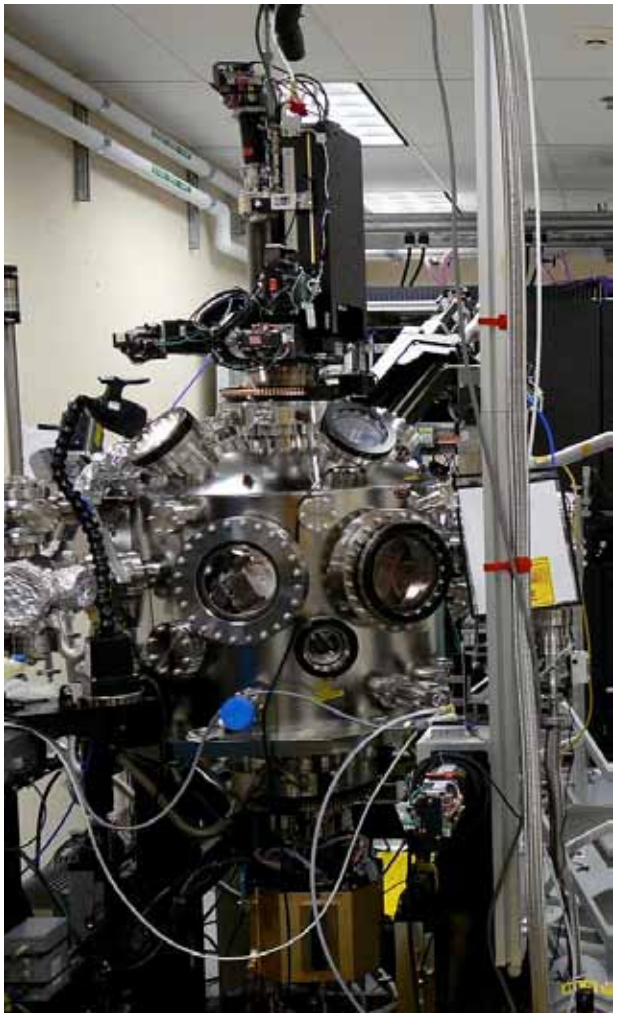

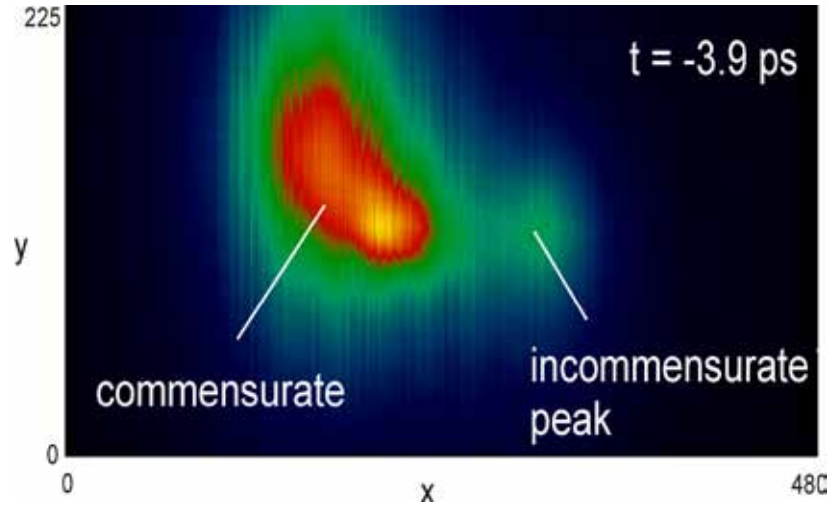

Example data from
Steve Johnson
steve.johnson@psi.ch
Paul Beaud
paul.beaud@psi.ch

1st SXR run July / August
Used by all 3 groups

cFCCD is in operation!

Needs at ALS & 1k Frame Store CCD

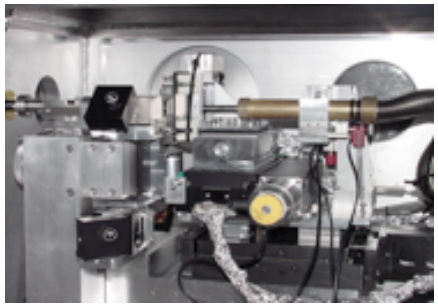

STXM

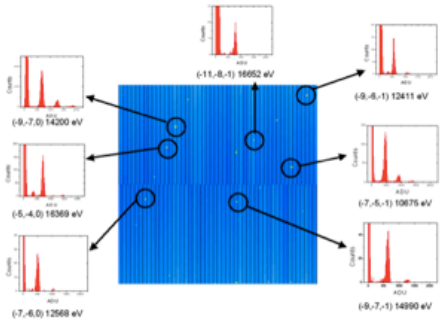

Scanning µDiffraction

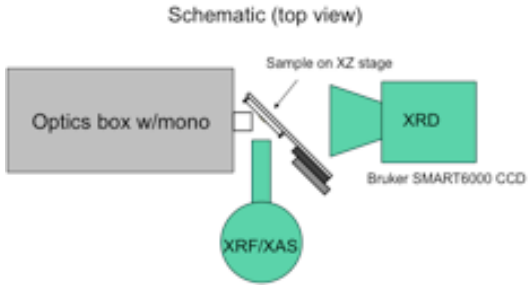

µXRF,µXRD,µXAS

Ptychography

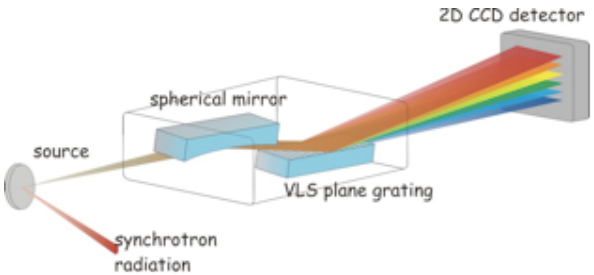

Photon in / photon out

Photoemission (phosphor)

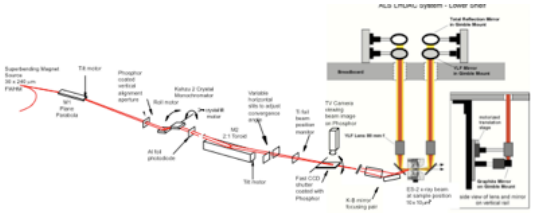

High Pressure Melting

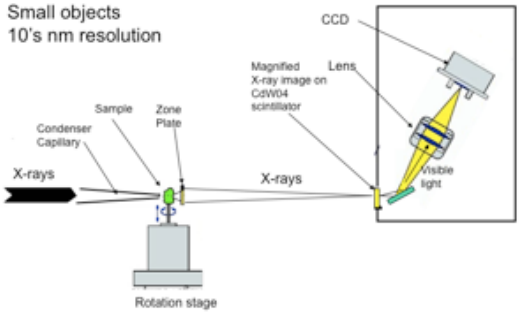

Tomography

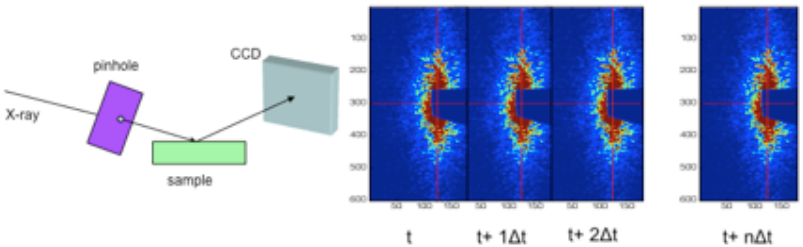

XPCS

What is Frame store?

- Frame store ->Electronic shutter

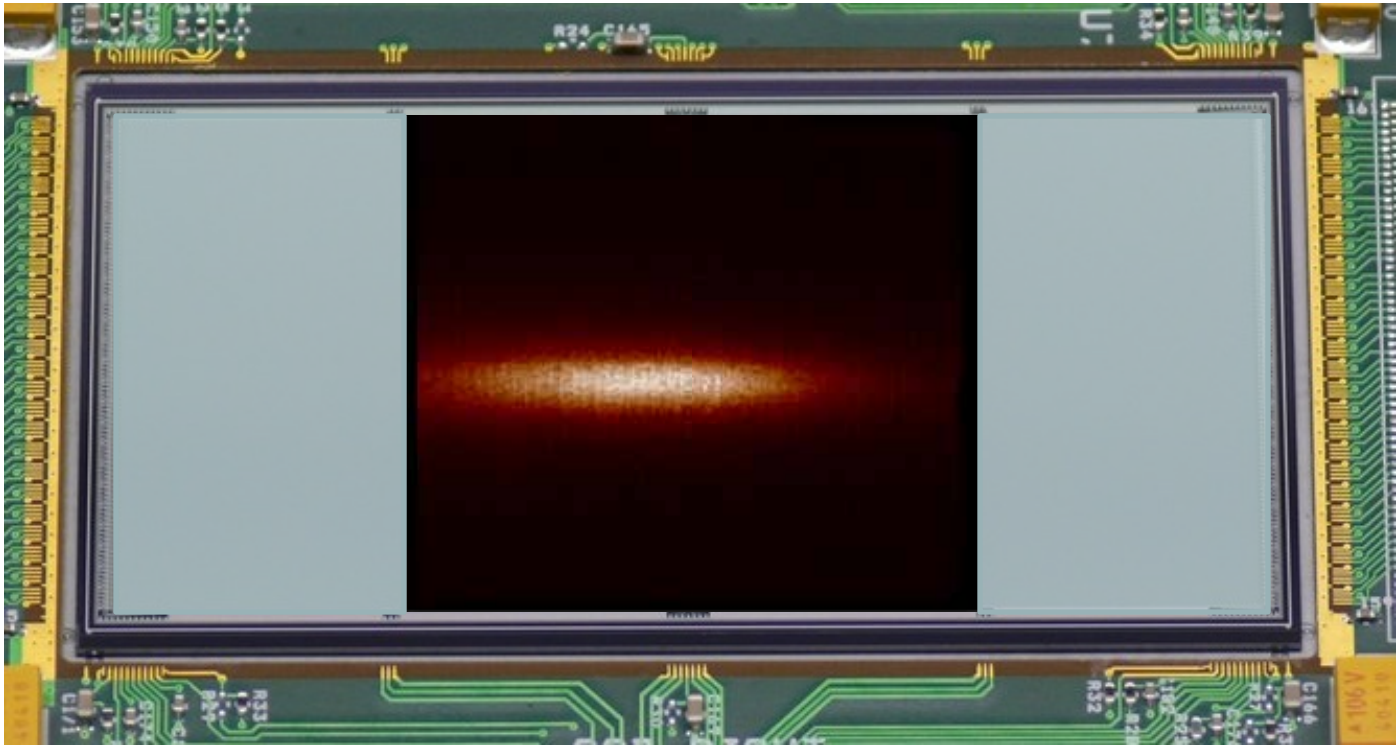

(New) R&D CCD – 1k Frame Store

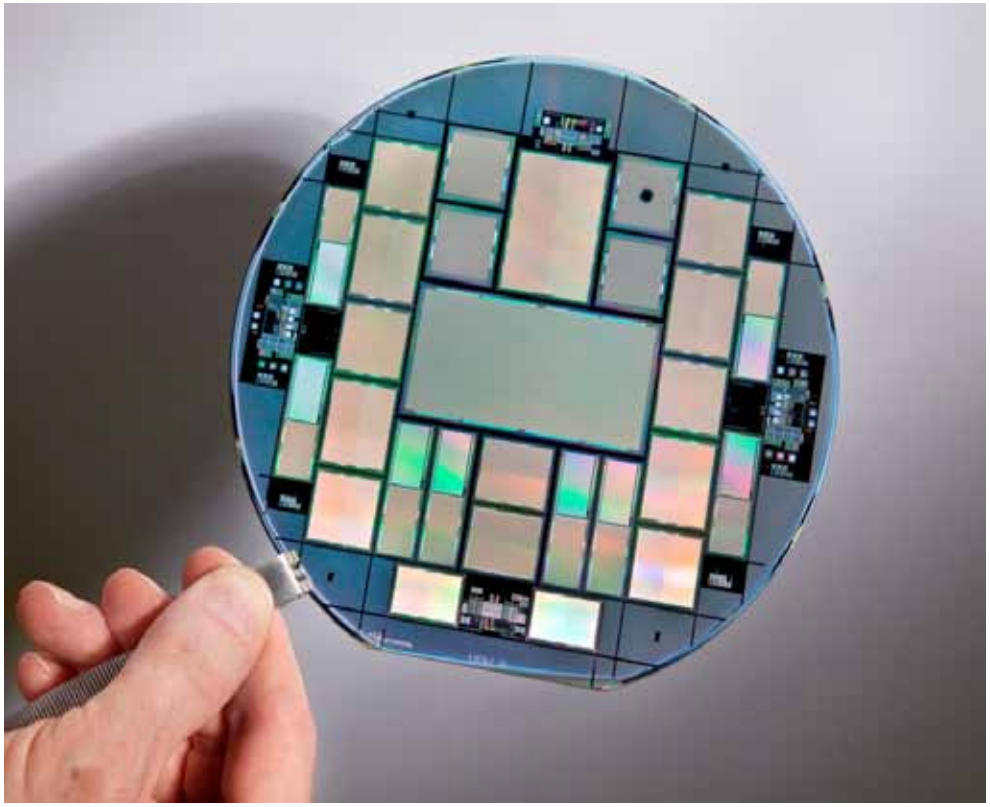

FY09 LDRD Wafer

First wafers received in 9/2010

- 30 x 30 um pixel
- 1920x960 pixels (8 times the area of cFCCD)
- Thick 200-650um
- 200fps
- Data volume ~ 400MB/s (HD 250GB -> ~10 min)

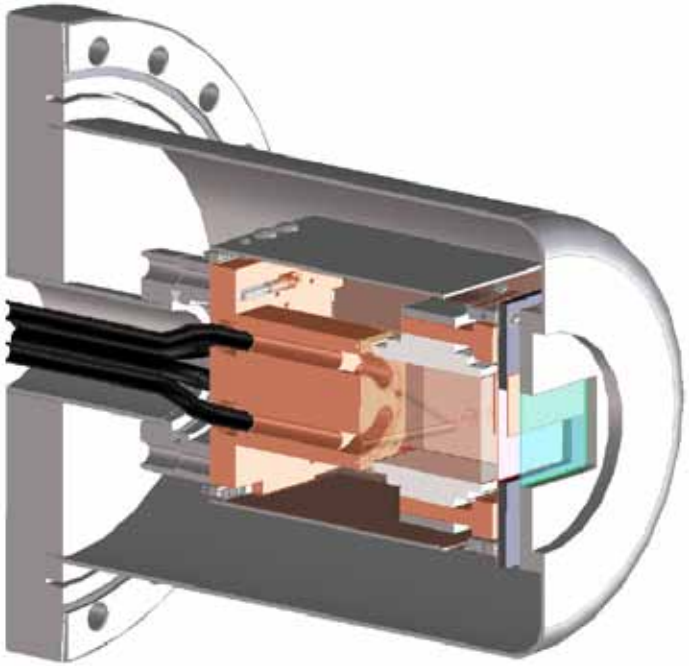

New ATCA based system

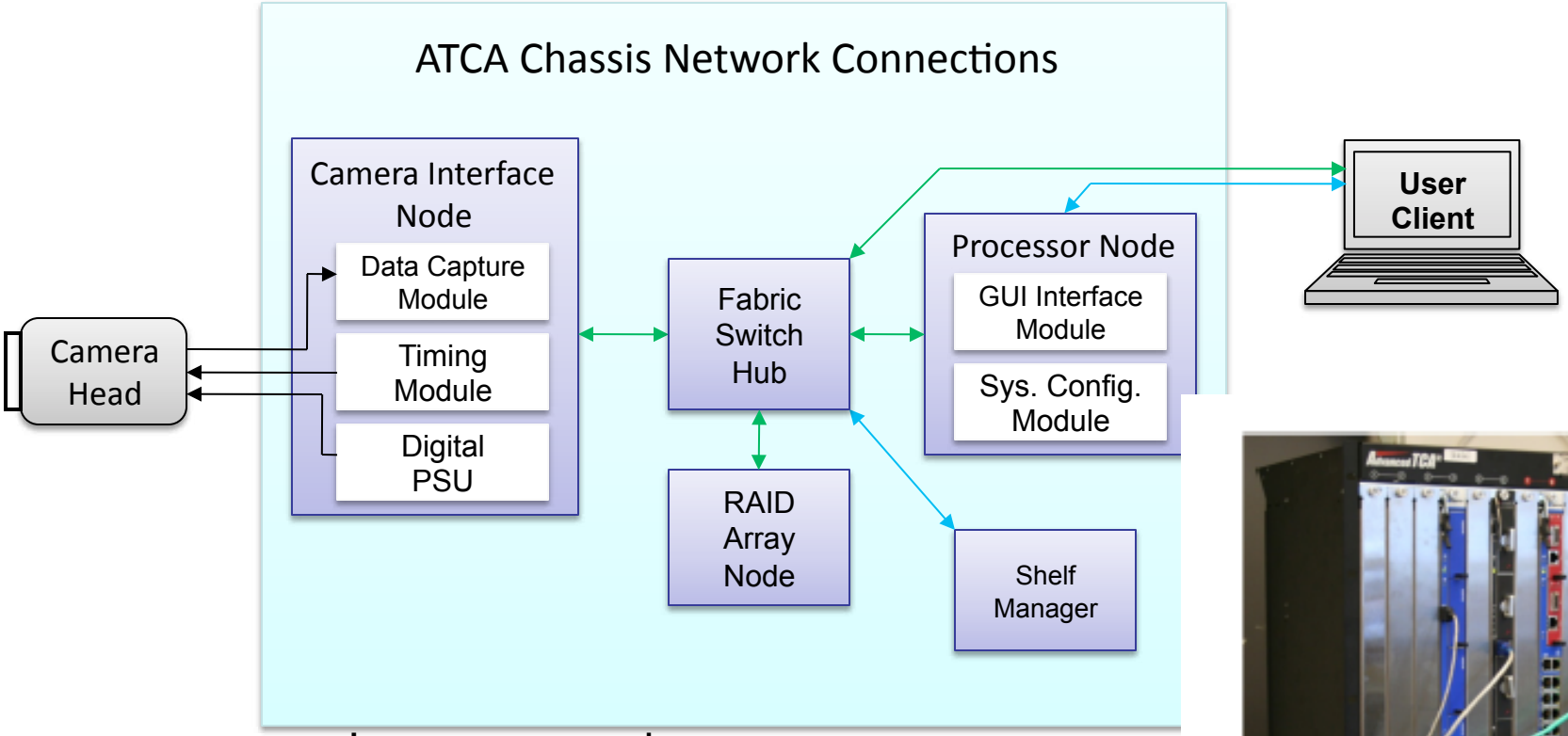

- Image processing
  - Dark image subtraction
  - Gain correction
  - Zero suppression
  - Digital integration
  - Binning
  - ...

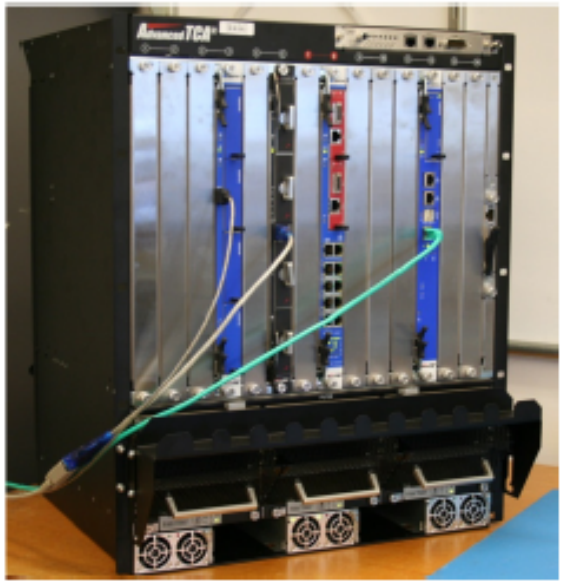

ATCA Crate

Conclusions & Outlook

- Synchotron radiation detector developement benefited from knowledge and infrastructure existing at LBNL.
- CCD sensor and readout IC were succesfuly used to create a fast camera for X-rays detection.
- Prototype FCCDs (480 x 480) have been used in experiments at ALS, APS and LCLS
  - Along with a new, compact mechanical design
- A 1k frame store version (1920 x 960) is being developed, and several systems will be delivered to ALS and APS

Thanks!

- LBNL
  - P.I.: Peter Denes
  - Nord Andresen
  - Jacque Bell
  - Jean-Marie Bussat
  - George Chao
  - Dionisio Doering
  - John Emes
  - Dario Gnani
  - Bryan Holmes
  - John Joseph
  - Jimmie Johnson
  - Brad Krieger
  - Patrick McVittie
  - Howard Padmore
  - John Peper
  - Jean-Pierre Walder
  - Rhonda Witharm
  - Sergio Zimmerman
  - George Zizka
- ANL
  - P.I. : Patricia Fernandes
  - John Weizeorick
  - Brian Tieman
  - Tim Madden
  - Lisa Gades
  - Todd Hayden
  - John Lee
  - Steve Ross
  - Suresh Narayanan
  - Alec Sandy
  - Chris Piatak
  - Jonathan Baldwin
- Users

  Prof. Larry Lurio, Northern Illinois University, IL
  Prof. Robert Leheny, John Hopkins University, MD.
  Prof. James Harden, University of Ottawa, Canada.
  Prof. Hyunjung Kim, Sogang University, Seoul, Korea.
  Prof. Sunil Sinha, University of San Diego, CA.
  Prof. George Thurston, Rochester Institute of Technology, NY.
  Dr. Yi-De Chuang, LBNL, USA
  Dr. Stefano Marchesini, LBNL, USA
  Dr. Nobumichi Tanamura
  Dr. Steve Johnson
  Dr. Paul Beaud
  ...